HAND LEVER VALVE(4/3 4/2WAY)

4HV SERIES

Symbol

4/3 way Closed center

4/2 way

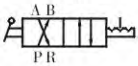

Specification

Model	4HV2□□ -06	4HV2□□ -08	4HV3□□ -08	4HV3□□ -10	4HV4□□ -15	4HV4□□ -20
Media	Air(to be filtered by 40μ filter element)					
Type	4 port 2 position、4 port 3 position					
Port size	1/8″	1/4″		3/8″	1/2″	3/4″
Orifice size mm^2 (Cv)	14(0.78)	16(0.89)	30(1.67)	33(1.83)	88(4.89)	95(5.27)
Pressure range	0~10.0 bar (0~1.0MPa)(0~142Psi)					
Proof pressure	15.0 bar (1.5MPa)(213Psi)					
Temperature range	-5~60℃					
Operating angle	90					

*Note: PT、NPT、BSPP Thread are available.

Ordering code

4HV — 2 — 30 — 06 — S

Model: 4HV: Hand lever valve

Code: 2: 2 series; 3: 3 series; 4: 4 series

Valve type: 10:4 port 2 position; 30:4 port 3 position

Port size: 06:1/8"; 08:1/4"; 10:3/8"; 15:1/2"; 20:3/4"

Installation: Blank:Body installation; S:Panel installation

Flow chart

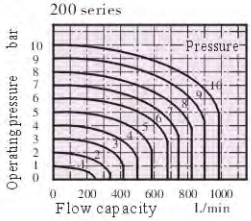

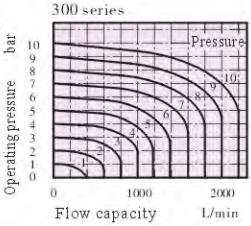

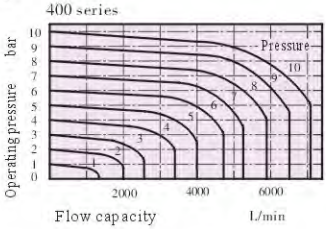

Inner structure

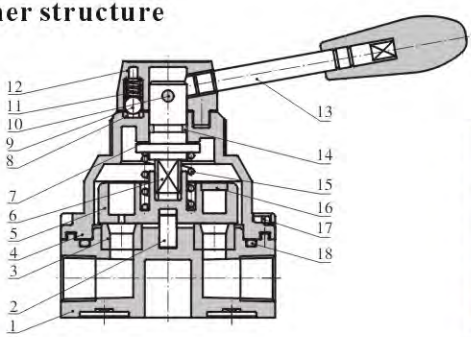

NO.	Item	NO.	Item
1	Body	2	Bearing pin
3	Sealed seat	4	Valve cover
5	Valve core	6	Spool
7	Washer	8	Fixing plate
9	Slude ball	10	Fast pin
11	Slide ball sping	12	Vale cap
13	Hand lever	14	O-ring
15	Slide ring sping	16	Sealed plate
17	Fixing screw	18	O-ring

Dimensions

Body installation

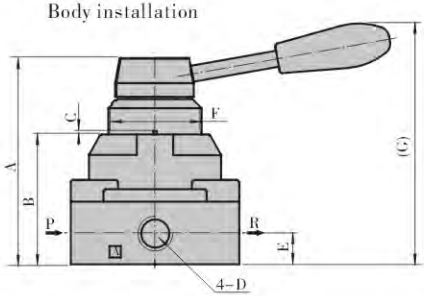

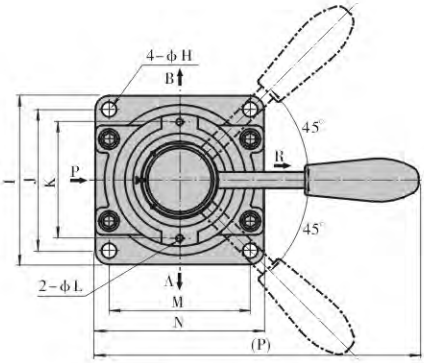

Panel installation

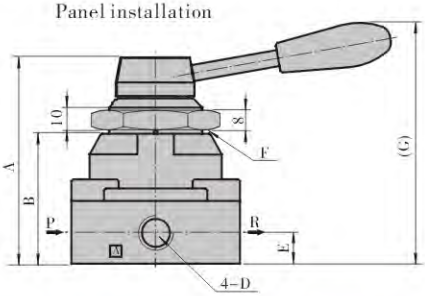

Type\Item	A	B	C	D	E	F	G	H	I	J	K	L	M	N	P
4HV2□□-06	72.6	45	1.5	1/8″	11.5	M34×1.5	92.5	5	62	49	40	3	49	62	120
4HV2□□-08	72.6	45	1.5	1/4″	11.5	M34×1.5	92.5	5	62	49	40	3	49	62	120
4HV3□□-08	88.5	56	1.5	1/4″	13.5	M40×1.5	104	6.6	74	62	51	3	62	74	140
4HV3□□-10	88.5	56	1.5	3/8″	13.5	M40×1.5	104	6.6	74	62	51	3	62	74	140
4HV4□□-15	110.3	72	2	1/2″	18	M52×1.5	126	6.6	102	89	64	3	81	94	160
4HV4□□-20	110.3	72	2	3/4″	18	M52×1.5	126	6.6	102	89	64	3	81	94	160